GARMIN

CRADLE F2

P11186 | 28/05/2025

ASSEMBLY GUIDE

TOOLS REQUIRED – NOT SUPPLIED

SECURITY TORX X10

Parts

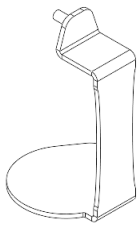

(A) x1

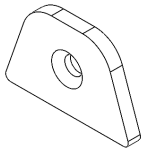

(B) x1

(C) x2

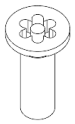

(D) x1

M3x10 SECURITY SCREW

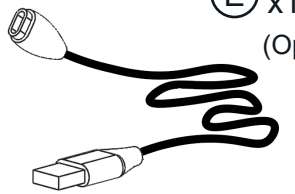

(E) x1

(Optional)

1

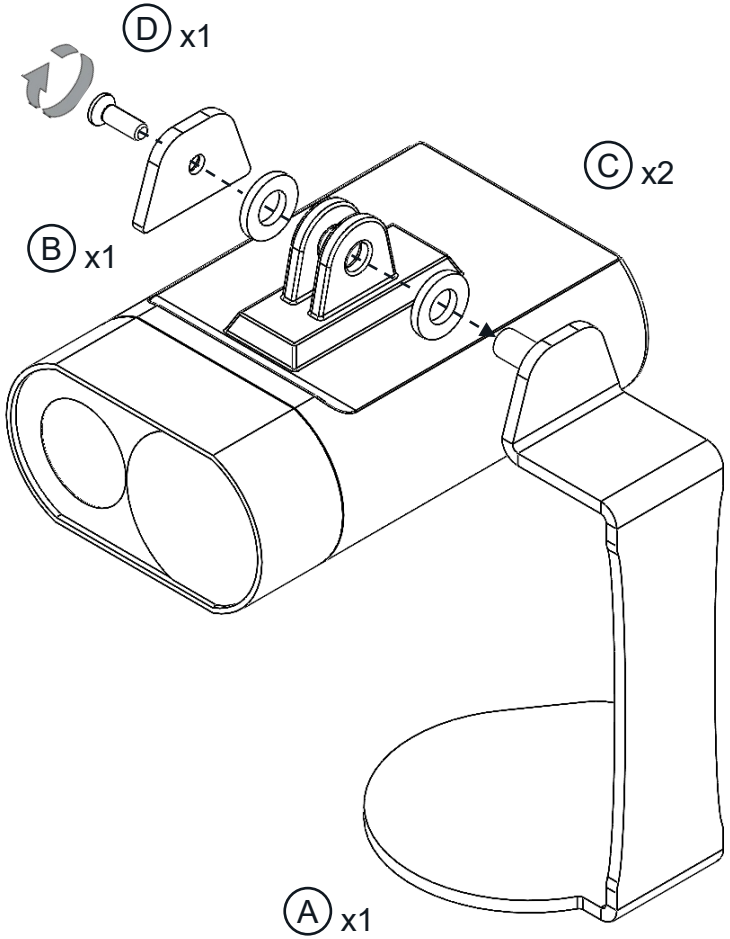

2

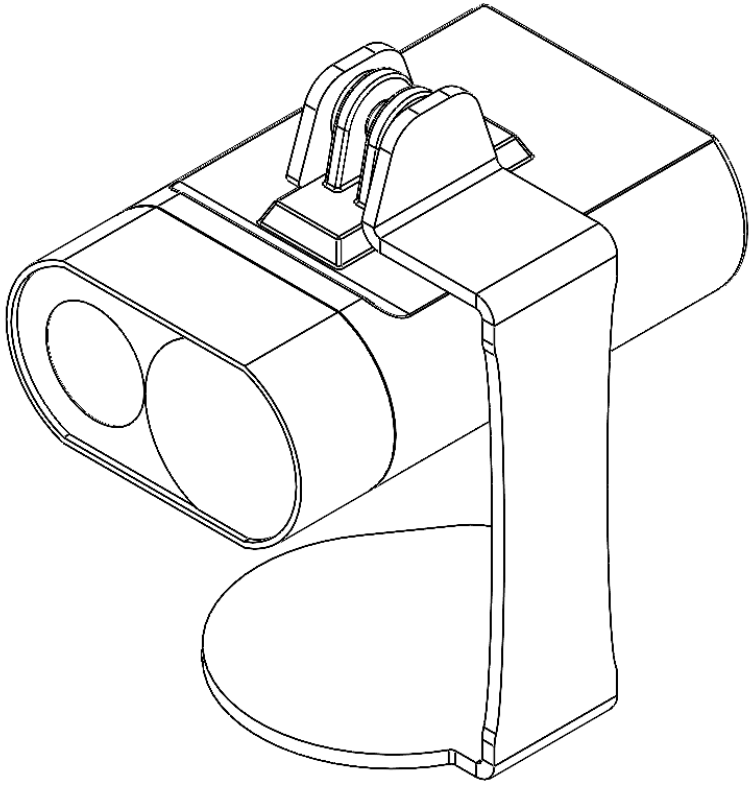

© Confidential Intellectual Property of Garmin Ltd.

GARMIN